United Nations ECE/TRANS/WP.29/GRSG/2013/5

Economic and Social Council

Distr.: General
1 February 2013

Original: English

Economic Commission for Europe

Inland Transport Committee

World Forum for Harmonization of Vehicle Regulations

Working Party on General Safety Provisions

104th session
Geneva, 15–19 April 2013
Item 5 of the provisional agenda
Regulation No. 46 (Devices for indirect vision)

Proposal for amendments to Regulation No. 46 (Devices for indirect vision)

Submitted by the expert from Japan *

The text reproduced below was prepared by the expert from Japan to introduce requirements allowing the installation of systems controlling the access of passengers on board. This document is based on informal document GRSG-103-13 distributed during the 103rd session of the Working Party on General Safety Provisions (GRSG). The modifications to the existing text of the Regulation are marked in bold characters.

* In accordance with the programme of work of the Inland Transport Committee for 2010–2014 (ECE/TRANS/208, para. 106 and ECE/TRANS/2010/8, programme activity 02.4), the World Forum will develop, harmonize and update Regulations in order to enhance the performance of vehicles. The present document is submitted in conformity with that mandate.

Please recycle

I. Proposal

The table of contents, add new Annexes 12 and 13, to read:

"Annex 11 …….

Annex 12 **Eye-points**

Annex 13 **Range of blind area created by the A-pillar or exterior rear-view mirror**"

Paragraph 2.1.1.3., amend to read:

"2.1.1.3. "Surveillance mirror" means a mirror other than the ones defined in paragraph 2.1.1. which can be fitted to the inside or outside of the vehicle in order to provide fields of vision other than those specified in paragraph**s 15.2.4.1. to 15.2.4.9**."

Paragraph 6.1.1.1., amend to read:

"6.1.1.1. All mirrors shall be adjustable**, except surveillance mirrors**."

Paragraph 6.1.1.3., amend to read:

"6.1.1.3. When the mirror is mounted on a plane surface, all parts, irrespective of the adjustment position of the device, including those parts remaining attached to the support after the test provided for in paragraph 6.1.3.2., which are in potential, static contact with a sphere either 165 mm in diameter in the case of an interior mirror or 100 mm in diameter in the case of an exterior mirror, shall have a radius of curvature 'c' of not less than 2.5 mm**, unless the exterior mirror is fitted at a height of not less than 2.0 m above the ground.**"

Paragraph 6.1.2.2.4.2., amend to read:

"6.1.2.2.4.2. **600 mm** for Class II and III main exterior rear-view mirrors;"

Paragraph 6.1.3.1., amend to read:

"6.1.3.1. Mirrors in Classes I to VI and Class VII (having fitments identical to Class III) shall be subjected to the tests described in paragraphs 6.1.3.2.1 and 6.1.3.2.2 **or in paragraph 6.1.3.4.** Class VII mirrors with a stem, shall be subjected to the tests described in paragraph 6.1.3.2.3. "

Insert new paragraphs 6.1.3.4. to 6.1.3.5., to read:

"**6.1.3.4.** **Static test**

Static load shall be applied to the mirror as described in either paragraph 6.1.3.4.1. or 6.1.3.4.2.

6.1.3.4.1. **Static test (a)**

In the case of the exterior mirror, apply a rearward force in a direction parallel to the vehicle centre line, to the centre of the rear-view mirror's direction-swivel section (or to the centre of the outermost mirror's direction-swivel section if more than one mirror is supported by the same mounting section, or to the centre of the mirror body if there is no direction-swivel section). However, if the centre of the rear-view mirror's direction-swivel section is located inside the vehicle's outermost side in the vicinity of the mirror mounting area, or that centre is located at a height of more than 2.0 m above the ground, the force may be applied to any part of

the mirror body that protrudes further than the vehicle's outermost side in the vicinity of the mirror mounting area.

In the case of the interior mirror, apply a forward force in each of the following directions, to the centre of the rear-view mirror's direction-swivel section (see Figure 3(a)):

(a) Direction parallel to the vehicle centre line;

(b) Directions 45° to the left and right of the vehicle centre line on the horizontal plane; and

(c) Direction 45° upward or downward of the horizontal line on the vertical plane parallel to the vehicle centre line.

Figure 3(a)

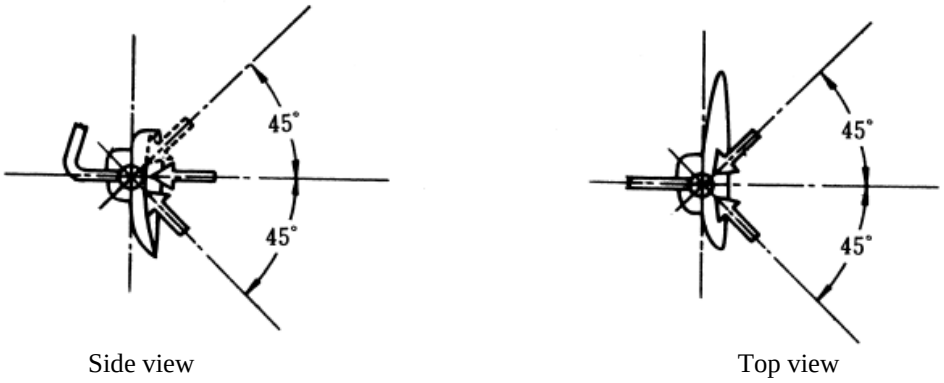

6.1.3.4.2. Static test (b)

In the case of the exterior mirror, place a 165 mm diameter cylinder in such a way that the exterior of the cylinder comes in contact with the vehicle's outermost side line in the vicinity of the mirror mounting area, or the line drawn at a height of 2.0 m above the ground. Apply a rearward force in a direction parallel to the vehicle centre line, to the cylinder centre line (see Figure 3(b)).

Figure 3(b)

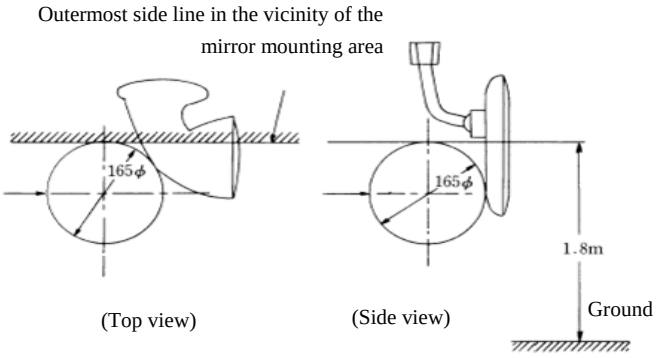

In the case of the interior mirror, place a 165 mm diameter spherical object in such a way that it comes in contact with the mirror surface centre, and apply a forward force in each of the following directions, to the spherical object centre (see Figure 3(c)):

(a) Direction parallel to the vehicle centre line;

(b) Directions 45° to the left and right of the vehicle centre line on the horizontal plane; and

(c) Direction 45° upward or downward of the horizontal line on the vertical plane parallel to the vehicle centre line.

Figure 3(c)

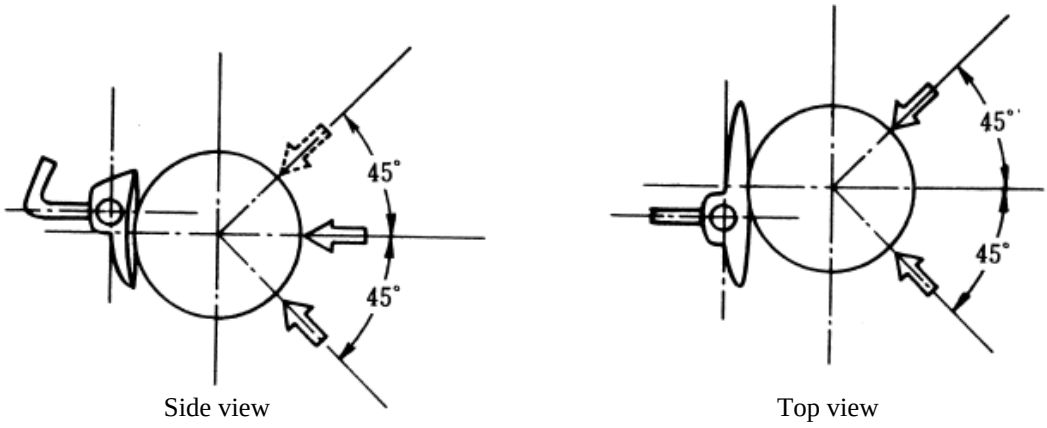

6.1.3.5. Results of the static test

When the static test is performed as described in paragraph 6.1.3.4.1. or 6.1.3.4.2., in the case of the exterior mirror, the rear-view mirror shall be inside of the vehicle's outermost side in the vicinity of the mirror mounting area or at a height of not less than 2 m above the ground, without the maximum value of the force continuously applied to the rear-view mirror exceeding 245 N.

However, this requirement does not apply if, when projected onto the horizontal plane, the angle formed by the vehicle centre line and the line connecting the rear-view mirror bracket rotational centre and the centre of the rear-view mirror's direction-swivel section (or the centre of the outermost mirror's direction-swivel section if more than one mirror is supported by the same mounting section, or the centre of the mirror body if there is no direction-swivel section) (in the case of a mirror where the rear-view mirror bracket rotational centre coincides with the centre of the rear-view mirror's direction-swivel section, the angle formed by the vehicle centre line and the line connecting the foremost point, at which the rear-view mirror and the vehicle's outermost side line in the vicinity of the mirror mounting area intersect, and the most protruding point) changes by at least 10° from the standard mounting position and becomes 40° or less after the displacement.

In the case of the interior mirror, the rear-view mirror shall, at a force of not more than 441 N, be displaced to the outside of the head impact area or drop off, break or crush without leaving sharp edges."

Paragraph 12.2., the reference to Figure 3 and Figure 3 amend to read Figure 3(d).

Paragraph 15.2.1.2., amend to read:

"15.2.1.2. The provisions of this Regulation do not apply to the surveillance mirrors defined in paragraph 2.1.1.3. Nevertheless, the exterior surveillance mirrors shall be mounted at least 2 m above the ground when the vehicle is under a load corresponding to its maximum technical permissible mass**, except those surveillance mirrors used to obtain the field of vision in paragraph 15.2.4.10. For those mirrors that protrude further than the vehicle's outermost side in the vicinity of the mirror mounting area, if the lowermost part of its protruding part is at a height of not more than 2.0 m above the ground, the test shall be performed as described in paragraphs 6.1.3.2.1. and 6.1.3.2.2. or in paragraph 6.1.3.4.**"

Paragraph 15.2.2.2., amend to read:

"15.2.2.2. Exterior mirrors shall be visible through the side windows or through the portion of the windscreen that is swept by the windscreen wiper**, except for the areas on the mirror surface that are not specified as visible areas.** Nevertheless, for design reasons, this last provision (i.e. the provisions relating the cleaned part of the windscreen) shall not apply to:

(a) exterior mirrors on the passenger side and optional exterior mirrors on the driver side of vehicles of categories M_2 and M_3;

(b) Class VI mirrors."

Insert a new paragraph 15.2.4.10., to read:

"**15.2.4.10. [Each Contracting Party or regional economic integration organization may request the following provision.]**

In vehicles of category M, a cylinder with a diameter of 0.3 m and height of 1.0 m that is in contact with the vehicle's front side and the lateral side on the passenger's side shall be partially visible using direct field of vision or any mirror including the surveillance mirror (see Figure 11). In this case, the eye-points in the direct field of vision are determined in Annex III. However, the blind area created by the A-pillar or exterior rear-view mirror as specified in Annex IV is excluded. If the field of vision cannot be achieved using these options, it may be achieved through installing a camera-monitor device, provided that it is easy to control the device to display images.

Figure 11

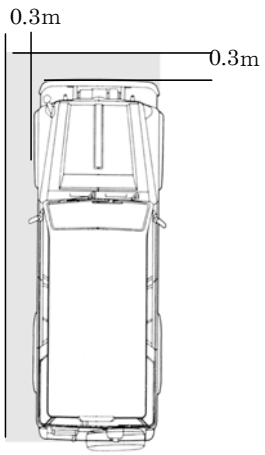

"

Paragraph 15.2.1.10. (former), renumber as paragraph 15.2.1.11.

Insert new Annex 12, to read:

"ANNEX 12

Eye-points

1. Definitions

1.1. "Eye-points" means (according to paragraph 15.2.4.10.) points located on a line passing through the point 635 mm directly above the seating reference point (hereafter the "eye-point centre") and perpendicular to the vehicle's centre plane. These points (binocular) are symmetrically positioned in relation to the eye-point centre, with a distance between them of 65 mm. In this case, the eye-point centre shall be adjusted in the forward/rearward or upward/downward direction by a specific compensation distance defined according to the respective back angle of the test vehicle, as shown in Table 1.

Table 1:
Eye-point centre compensation

Back angle [°]	*Compensation distance*		*Back angle [°]*	*Compensation distance*	
	Forward/rearward [mm]	*Upward/downward [mm]*		*Forward/rearward [mm]*	*Upward/downward [mm]*
5	–186	28	23	–18	5
6	–177	27	24	–9	3
7	–167	27	25	0	0
8	–157	27	26	9	–3
9	–147	26	27	17	–5
10	–137	25	28	26	–8
11	–128	24	29	34	–11
12	–118	23	30	43	–14
13	–109	22	31	51	–18
14	–99	21	32	59	–21
15	–90	20	33	67	–24
16	–81	18	34	76	–28
17	–72	17	35	84	–32
18	–62	15	36	92	–35
19	–53	13	37	100	–39
20	–44	11	38	108	–43
21	–35	9	39	115	–48
22	–26	7	40	123	–52

Note: Symbols used in the table: Forward/rearward direction (–: forward, +: rearward); Upward/downward direction (–: downward, +: upward)

2. Eye-point movable range

In testing according to paragraph 15.2.1.3., as compensation of the eye-points (binocular) of the driver moving the body in forward/rearward, lateral, or upward/downward directions to check the vehicle's surroundings at the start of the vehicle, measurements may be taken with

the eye-point centre adjusted in the forward/rearward, lateral, or upward/downward directions, respectively, based on the reference eye-point centre, provided that it is within the range of compensation distances listed in each column of Table 2.

Table 2:
Range of eye-point centre compensation for the stretching

Measures in [mm]	*Forward/rearward compensation distance (+: rearward, –: forward)*	*Lateral compensation distance (+: right, –: left)*	*Upward/downward compensation distance (+: upward, –: downward)*
Upward stretching eye-points	0	–10	40
Forward stretching eye-points	–140	–15	10
Lateral stretching eye-points	30	–110	15

Note: **In the table, for the left-hand drive vehicles, "right" shall be read as "left", and "left" shall be read as "right".**"

Insert new Annex 13, to read:

"**ANNEX 13**

Range of Blind Area Created by the A-Pillar or Exterior Rear-View Mirror

1. Definitions

1.1. "Blind area created by the exterior rear-view mirror" means a blind area created by the vehicle structure that retains or protects the exterior rear-view mirror and exterior rear-view mirror.

1.2. "Blind area created by the A-pillar" means a blind area created by the vehicle structure that is located forward of the eye points and above a plane parallel to the vehicle centre and passing through the two points consisting of the eye-point centre and the lowermost point of the side glazing's transparent area where the ground surface can be viewed through the side glazing when the left side of the vehicle is checked from the reference eye-point centre (point a) (Figure 1). However, a window provided in a part of the lower area of the door is not considered as the side glazing. For the left-hand drive vehicles, "left" shall be read as "right".

2. Range of the blind area

The range of the blind area created by the A-pillar or exterior rear-view mirror in paragraph 15.2.4.10. shall be an area that meets the following formula. In this case, if there are more than one blind area, each blind area shall meet the conditions of the formulae.

$$X \leq 0.292 \cdot L - 0.203$$

Where:

X (m): is the limit of the excluded area, i.e. the distance between the centre of a cylinder in contact with the front edge of the

blind area and the centre of a cylinder in contact with its rear edge.

L (m): **is located inside the blind area created by the A-pillar or exterior rear-view mirror. Distance between the rear edge of a cylinder in contact with the rear edge of the blind area and the front edge of the rear wheel.**

Figure 1

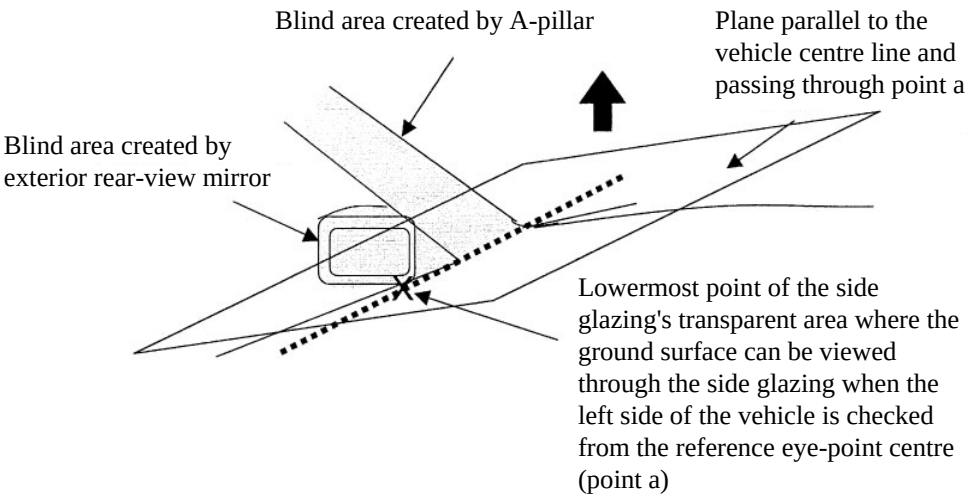

Figure 2

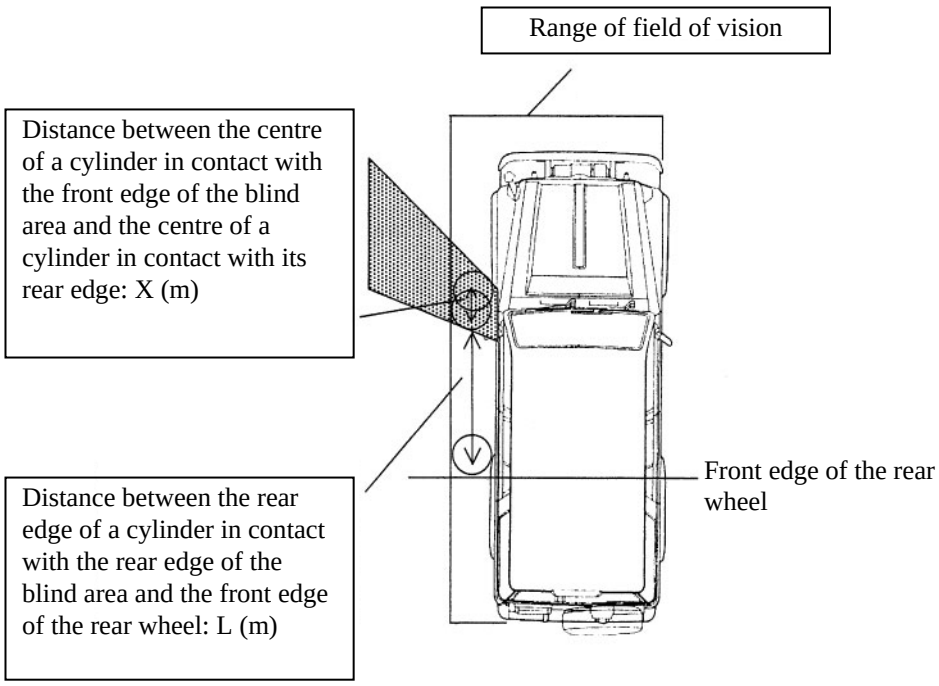

"

II. Justification

Paragraphs 15.2.1.2. and 5.2.4.10.:

1. In narrow roads or in a traffic environment where a sidewalk is not provided, the risk of pedestrian/bicycle-to-vehicle accidents is high as the pedestrian/bicycle and motor vehicle are not sufficiently separated. For safety reason, it is extremely important to ensure that the field of vision of the vehicle driver allows seeing pedestrians/bicycles.

2. Japan has already made the following field of vision requirements mandatory for passenger cars, etc. However, taking into account the traffic conditions in other Contracting Parties, Japan proposes to allow choices. As regards the sentence in square brackets, from the view of developing the International Whole Vehicle Type Approval (IWVTA), Japan believes that it appropriate to remove the brackets so as to make the sentence valid.

3. Thus, Japan proposes the above amendments to increase the safety benefits of the indirect vision of the driver. It is aimed at ensuring his/her field of vision immediately in front of or beside (on the passenger's side) the vehicle in the case of presence of (a) pedestrian(s) around the vehicle. The driver, when starting the vehicle, moves his upper body, as necessary, within a possible range to obtain a better visibility and ability to check the surroundings. It is necessary to be enable a direct or indirect view of (a) pedestrian(s).

4. Thus, Japan proposes a requirement for an indirect field of vision where the object (a pole with a diameter of 30 cm and height of 1.0 m), located within the range of the field of vision immediately in front of the vehicle and in the vicinity of the vehicle on the passenger's side, can be viewed directly or indirectly using any mirror (including the surveillance mirror) or camera.

5. To meet this requirement, some vehicles will need a surveillance mirror installed at a height of not more than 2.0 m. Therefore, Japan proposes the height requirement of "not more than 2.0 m".

Paragraph 6.1.2.2.4.2.:

6. As the mirror can hinder the direct field of vision when turning at an intersection, it is desirable to obtain a wide field of vision with a mirror surface that is as small as possible. Thus, it should be allowed to choose the mirror curvature up to 600 R.

Paragraph 6.1.1.1.:

7. The surveillance mirror does not need to be adjustable since it is intended to be used to view objects in an unspecified range of field of vision.

Paragraph 6.1.1.3.:

8. This paragraph is aimed at aligning the provisions with those of Regulation No. 26.

Paragraphs 6.1.3.4.:

9. This paragraph allows the static test that is almost equivalent to the dynamic test.

Paragraph 15.2.2.2.:

10. It is not necessary to include areas that are not specified as visible in the areas to be swept by the windscreen wiper.