UNITED
NATIONS

E

Economic and Social Council

Distr.
GENERAL

ECE/TRANS/WP.29/2010/42
18 December 2009

Original: ENGLISH

ECONOMIC COMMISSION FOR EUROPE

INLAND TRANSPORT COMMITTEE

World Forum for Harmonization of Vehicle Regulations

One-hundred-and-fiftieth session
Geneva, 9-12 March 2010
Item 4.2.40 of the provisional agenda

1958 AGREEMENT

Consideration of draft amendments to existing Regulations

Proposal for Supplement 1 the original version of Regulation No. 118
(Burning behaviour of materials)

Submitted by the Working Party on General Safety Provisions */

The text reproduced below was adopted by the Working Party on General Safety (GRSG) at its ninety-seventh session (ECE/TRANS/WP.29/GRSG/76, para. 21) to improve the fire safety level in buses. It is based on informal document GRSG-97-32-Rev.1 as reproduced in Annex IV to the report (ECE/TRANS/WP.29/GRSG/76, para. 21). It is submitted to the World Forum for Harmonization of Vehicle Regulations (WP.29) and to the Administrative Committee (AC.1) for consideration.

*/ In accordance with the programme of work of the Inland Transport Committee for 2006-2010 (ECE/TRANS/166/Add.1, programme activity 02.4), the World Forum will develop, harmonize and update Regulations in order to enhance performance of vehicles. The present document is submitted in conformity with that mandate.

The title of the Regulation, amend to read:

"UNIFORM TECHNICAL PRESCRIPTIONS CONCERNING THE BURNING BEHAVIOUR AND/OR THE CAPABILITY TO REPEL FUEL OR LUBRICANT OF MATERIALS USED IN THE CONSTRUCTION OF CERTAIN CATEGORIES OF MOTOR VEHICLES"

The list of contents, amend to read:

"Regulation No. 118

UNIFORM TECHNICAL PRESCRIPTIONS CONCERNING THE BURNING BEHAVIOUR AND/OR THE CAPABILITY TO REPEL FUEL OR LUBRICANT OF MATERIALS USED IN THE CONSTRUCTION OF CERTAIN CATEGORIES OF MOTOR VEHICLES

…..

12. Transitional Provisions .....

…..

Annex 9 - Test to determine the capability of materials to repel fuel or lubricant"

The text of the Regulation

Paragraphs 1. to 1.3., amend to read:

"1. SCOPE

1.1. This Regulation applies to the burning behaviour (ignitibility, burning rate and melting behaviour) and to the capability to repel fuel or lubricants of materials used in vehicles of categories M_3, Classes II and III 1/.

Type approvals are granted according to:

1.2. Part I - Approval of a vehicle type with regard to the burning behaviour and/or the capability to repel fuel or lubricant of the components used in the interior compartment, the engine compartment and any separate heating compartment.

1.3. Part II - Approval of a component with regard to its burning behaviour and/or its capability to repel fuel or lubricant installed in the passenger compartment, the engine compartment or any separate heating compartment."

1/ As defined in the Consolidated Resolution on the Construction of Vehicles (R.E.3), Annex 7 (document TRANS/WP.29/78/Rev.1/Amend.2).

Insert new paragraphs 2.3. and 2.4., to read:

"2.3. "Engine compartment" means the compartment in which the engine is installed and in which a combustion heater may be installed.

2.4. "Separate heating compartment" means a compartment for a combustion heater located outside the interior compartment and the engine compartment."

Paragraphs 2.3 (former) to 2.6., renumber as paragraphs 2.5. to 2.8.

Paragraphs 3.3.2. to 3.3.3.1., amend to read:

"3.3.2. In the case of components already type approved: a list of the type approval numbers and maker's type designations of the parts concerned, shall be enclosed in the application for the vehicle type approval;

3.3.3. In the case of components without ECE type approval:

3.3.3.1. Samples, the number of which is specified in Annexes 6 to 9, of the components used in the vehicles, which are representative of the type to be approved;"

Paragraph 4.2., amend to read:

"4.2. An approval number… (at present 01 corresponding to the 01 series of amendments) shall indicate..."

Paragraph 4.4.1., amend footnote 2/ to read:

"2/ 1 for Germany, … 50 for Malta, 51 for the Republic of Korea, 52 for Malaysia, 53 for Thailand, 54 and 55 (vacant), 56 for Montenegro, 57 (vacant) and 58 for Tunisia. Subsequent numbers shall … the Agreement."

Paragraph 5., amend to read:

"5. PART I: APPROVAL OF A VEHICLE TYPE WITH REGARD TO THE BURNING BEHAVIOUR OF THE COMPONENTS USED IN THE INTERIOR COMPARTMENT, THE ENGINE COMPARTMENT AND ANY SEPARATE HEATING COMPARTMENT AND/OR THE CAPABILITY TO REPEL FUEL OR LUBRICANT OF INSULATION MATERIALS USED IN THE ENGINE COMPARTMENT AND ANY SEPARATE HEATING COMPARTMENT"

Paragraphs 5.2.1. to 5.2.3., amend to read:

"5.2.1. The materials of the passenger compartment, the engine compartment and any separate heating compartment used in the vehicle to be type approved shall meet the requirements of Part II of this Regulation.

5.2.2. The materials and/or equipment used in the passenger compartment, the engine compartment and any separate heating compartment and/or in devices approved as components shall be so installed as to minimize the risk of flame development and flame propagation.

5.2.3. Such materials and/or equipment shall only be installed in accordance with their intended purposes and the test(s) which they have undergone (see paragraphs 6.2.1., 6.2.2., 6.2.3., 6.2.4., 6.2.5. and 6.2.6.), especially in relation to their burning and melting behaviour (horizontal/vertical direction) and/or their capability to repel fuel or lubricant."

Paragraph 6., amend to read:

"6. PART II: APPROVAL OF A COMPONENT WITH REGARD TO ITS BURNING BEHAVIOUR AND/OR ITS CAPABILITY TO REPEL FUEL OR LUBRICANT"

Paragraph 6.1.1.2., amend to read:

"6.1.1.2. the intended use (seat upholstery, roof lining, insulation, etc.),"

Paragraph 6.1.4., amend to read:

"6.1.4. "Exposed face" means the side of a material which is facing towards the passenger compartment, the engine compartment and any separate heating compartment when the material is mounted in the vehicle."

Insert new paragraphs 6.1.7. and 6.1.8., to read:

"6.1.7. "Insulation material(s)" means material(s) used to reduce heat transfer by conduction, radiation or convection and for sound-proofing in the engine compartment and any separate heating compartment.

6.1.8. "Capability to repel fuel or lubricant" means the capability of materials to repel fuel or lubricant when measured according to Annex 9 to this Regulation."

Insert new paragraphs 6.2.4 and 6.2.5., to read:

"6.2.4. All insulation material(s) installed in the engine compartment and any separate heating compartment shall undergo the test described in Annex 9 to this Regulation.

The result of the test shall be considered satisfactory if, taking the worst test results into account, the increase of the weight of the test sample does not exceed 1 g.

Recesses necessary for technical reasons, e.g. tubes or structural members that need to pass through the material shall be allowed as long as the protection is maintained (e.g. sealant, tape …).

6.2.5. Electric cables shall undergo the resistance to flame propagation test described in ISO standard 6722:2006, paragraph 12.

The result of the test shall be considered satisfactory if, taking into account the worst test result, any combustion flame of insulating material shall extinguish within 70 seconds and a minimum of 50 mm insulation at the top of the test sample shall remain unburned."

Paragraphs 6.2.4.(former) to 6.2.4.3.2., renumber as paragraphs 6.2.6. to 6.2.6.3.2.

Paragraph 6.2.4.4., should be deleted.

Paragraph 6.2.4.5., renumber as paragraph 6.2.6.4.

Insert new paragraphs 12. to 12.5., to read:

"12. TRANSITIONAL PROVISIONS

12.1. As from the official date of entry into force of the 01 series of amendments, no Contracting Party applying this Regulation shall refuse to grant ECE approval under this Regulation as amended by the 01 series of amendment.

12.2. As from 24 months after the official date of entry into force of the 01 series of amendments, Contracting Parties applying this Regulation shall grant ECE approvals only if the vehicle type or component type to be approved meet the requirements of this Regulation as amended by the 01 series of amendments.

12.3. Starting from 60 months after the official date of entry into force of the 01 series of amendments, Contracting Parties applying this Regulation may refuse first national or regional registration (first entry into service) of a vehicle which does not meet the requirements of this Regulation as amended by the 01 series of amendments.

12.4. Even after the date of entry into force of the 01 series of amendments to this regulation, approvals of the components to the preceding series of amendments to the regulation shall remain valid and Contracting Parties applying this Regulation shall continue to accept them.

12.5. Contracting Parties applying this Regulation shall not refuse to grant extensions of approval to the 00 series of amendments to this Regulation."

Annex 1

The title, amend to read:

"INFORMATION DOCUMENT

(in accordance with paragraph 3.2. of this Regulation relating to the ECE Type Approval of a vehicle with regard to the burning behaviour of the components used in the passenger compartment, the engine compartment and any separate heating compartment and/or the capability to repel fuel or lubricant of insulation materials used in the engine compartment and any separate heating compartment)"

Paragraph 3., amend to read:

"3. BODYWORK
Interior fittings and/or insulation materials"

Insert new paragraphs 3.3., 3.3.1., 3.3.1.1., 3.4. and 3.4.1., to read:

"3.3. Capability of materials to repel fuel or lubricant used in the vehicle
3.3.1. Material(s) used for insulation purposes
3.3.1.1. Component type-approval number(s): ……
3.4. Electric cables
3.4.1. Component type-approval number(s): ……"

Annex 2

The title, amend to read:

"INFORMATION DOCUMENT

(in accordance with paragraph 3.2. of the Regulation relating to the ECE Type Approval of a component used in the passenger compartment, the engine compartment and any separate heating compartment with regard to its burning behaviour and/or the capability to repel fuel or lubricant of insulation materials used in the engine compartment and any separate heating compartment)"

Insert new items 3. to 4.6., to read:

"3. INSULATION MATERIALS
3.1. Material(s) used for: .....
3.2. Base material(s)/designation: . . . / . . . .
3.3. Composite/single (1/) material, number of layers 1/: .....
3.4. Type of coating (1/): .....
3.5. Maximum/minimum thickness ……mm
3.6. Type-approval number, if available: .....

4. ELECTRIC CABLES
4.1. Material(s) used for: .....
4.2. Base material(s)/designation: . . . / . . . .
4.3. Composite/single (1/) material, number of layers 1/: .....
4.4. Type of coating (1/): .....
4.5. Maximum/minimum thickness ……mm
4.6. Type-approval number, if available: ....."

Annex 5, amend to read:

"Annex 5

ARRANGEMENTS OF APPROVAL MARKS

Example 1

(see Part I of this Regulation)

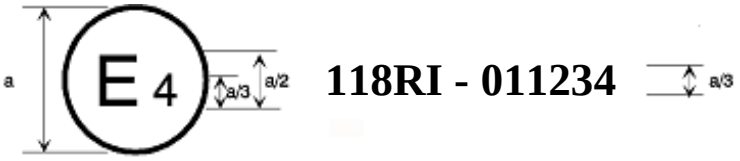

a = 8 mm min

The above approval mark affixed to a vehicle shows that the type concerned was approved in the Netherlands (E4) pursuant to Part I of Regulation No. 118 under approval No. 011234. The first two digits (01) of the approval number indicate that the approval was granted in accordance with the requirements of the 01 series of amendments to Regulation No. 118.

Example 2

(see part II of this Regulation)

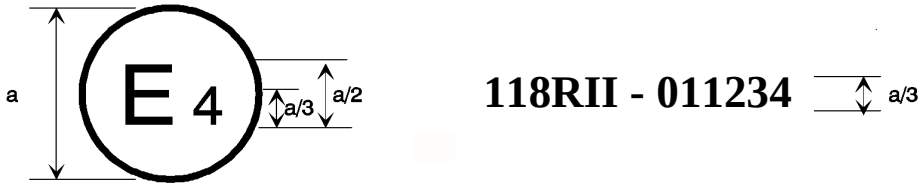

a = 8 mm min

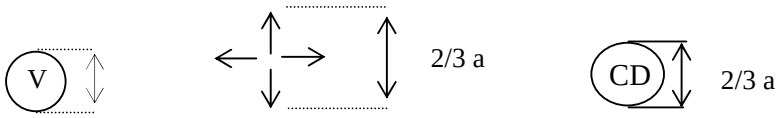

The above approval mark affixed to a component shows that the type concerned was approved in the Netherlands (E4) pursuant to Part II of Regulation No. 118 under approval number 011234. The first two digits (01) of the approval number indicate that the approval was granted in accordance with the requirements of the 01 series of amendments to Regulation No. 118.

The additional symbol…"

Insert a new Annex 9, to read:

"Annex 9

TEST TO DETERMINE THE CAPABILITY OF MATERIALS TO REPEL FUEL OR LUBRICANT

1. Scope

This annex lists prescriptions to test the capability of insulation materials used in engine compartments and separate heating compartments.

2. Sampling and principle

2.1. The test samples shall measure: 140 mm x 140 mm.

2.2. The thickness of the samples shall be 5mm. If the thickness of the test sample is more than 5 mm, it shall be reduced to 5 mm by a mechanical process applied to the side which does not face the engine compartment or separate heating compartment.

2.3. The test liquid shall be diesel fuel according to standard EN 590:1999 (Market fuels). or alternatively diesel fuel according to ECE Regulation No. 83 (Annex 10: Specification of reference fuels).

2.4. Four samples shall undergo the test.

3. Apparatus (see figures 4a and 4b)

The apparatus shall consist of:

A a base plate, with a hardness of at least 70 Shore D.

B an absorbant surface on the baseplate (e.g. paper);

C a metal cylinder (inner diameter of 120 mm, outer diameter of 130 mm, height of 50 mm), filled with the test liquid;

D-D' two screws with wing nuts;

E the test sample;

F top plate

4. Procedure

4.1. The test sample and the apparatus shall be conditioned for at least 24 hours at a temperature of 23 ± 2°C and a relative humidity of 50 ± 5 per cent and shall be maintained under these conditions until immediately prior to testing.

4.2. The test sample shall be weighed.

4.3. The test sample, with its exposed face uppermost, shall be placed on the base of the apparatus by fixing the metal cylinder in a centred position with sufficient pressure on the screws. No test liquid shall leak.

4.4. Fill the metal cylinder with test liquid to a height of 20 mm and let the system rest for 24 hours.

4.5. Remove the test liquid and the test sample from the apparatus. If residue of the test liquid is found on the test sample it shall be removed without compressing the test sample.

4.6. The test sample shall be weighed.

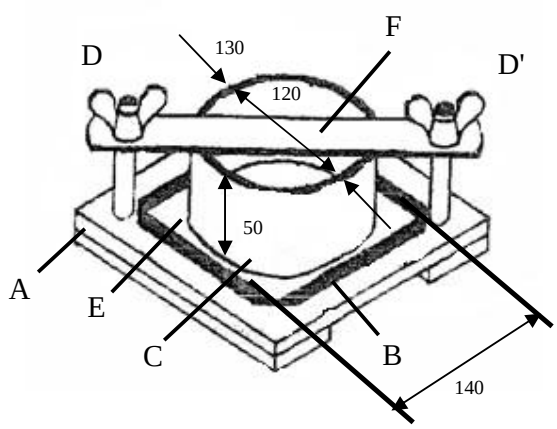

Figure 4a
Apparatus for testing the capability to repel fuel or lubricant
(Dimensions in millimeters)"

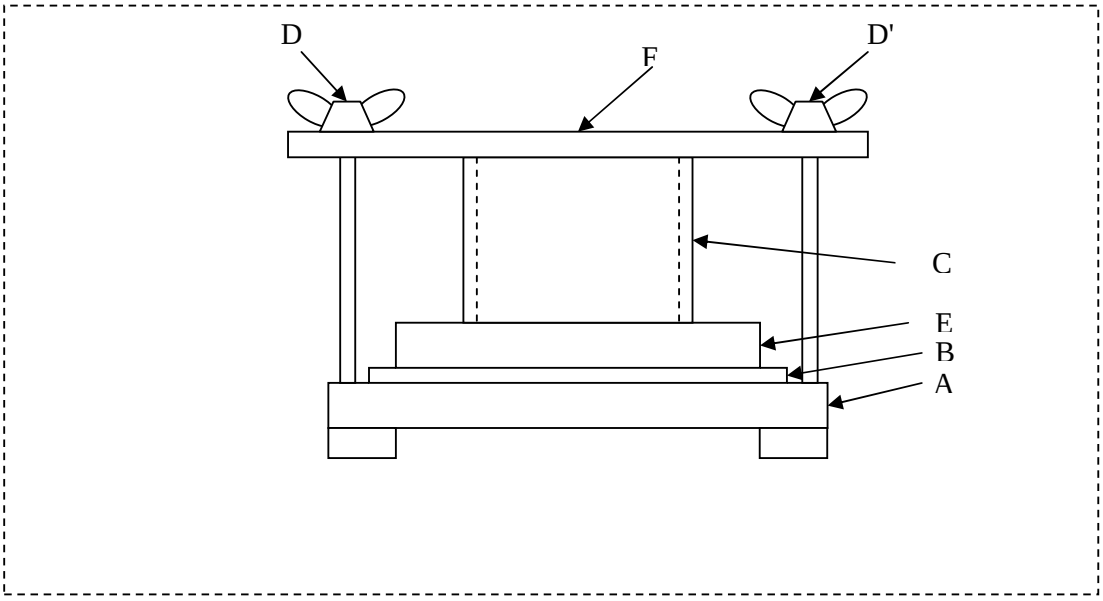

Figure 4b
Apparatus for testing the capability to repel fuel or lubricant
(Side View)"

- - - - -